BJVP
Brazilian Journal of Veterinary Pathology

Original Full Paper

Pathological and Molecular Analysis of Turkey Coronavirus Replication in Captive Wild Turkey Embryos (Broad-Breasted Bronze Breeder)

Deriane E. Gomes[1], Ana C. G. Rosa[1], Daniela F. Nobrega[1], Andrea F. Garcia[1], Paulo E. Brandão[2], Tereza C. Cardoso[1]

[1]UNESP- São Paulo State University, Laboratory of Virology, DAPSA, Faculdade de Medicina Veterinária, Araçatuba, SP, Brazil
[2]Coronavirus Research Group, Faculdade de Medicina Veterinária e Zootecnia, USP - University of São Paulo, SP, Brazil.
Corresponding Author: Tereza. C. Cardoso, Departamento de Apoio, Produção e Saúde Animal, Faculdade de Medicina Veterinária - Unesp, Rua Clóvis Pestana, 793, CEP 16050-680 Araçatuba, SP, Brazil. Fax: +55-18-622 6487
E-mail: tcardoso@fmva.unesp.br

Submitted August 8th 2011, Accepted October 26th 2011

Abstract

The degree of genetic and pathologic variation exhibited by a turkey *Coronavirus* (TCoV) strain was investigated after nine serial passages in 25-day-old turkey embryos obtained from wild broad-breasted bronze breeders. In spite of spleen, liver, kidneys, cloacal bursa and thymus have been collected and analysed, the main histopathological changes were only documented in the intestine sections. Microscopic lesions were characterized as mild enteritis, low degree of enterocyte vacuolization and detachment of the intestinal villous after five consecutive passages and were considered absent in the last passages. Genealogic analysis based on S1 and S2 DNA sequences suggested that Brazilian isolate might be considered as originated from TCoV strains circulating in the United States, as 100% identity with TCoV-Gl strain. Although S1 S2 sequences from each passage revealed no significant point mutations, and no correlation could be speculate between S2 nucleotide changes and pathologic features in infected embryos. This is the first demonstration of wild turkey embryos as a model for TCoV isolation and propagation.

Key Words: Turkey Coronavirus, spike gene, wild turkey species, pathology

Introduction

Turkey coronavirus (TCoV) is associated with contagious enteritis in young poults, which leads to an enormous economic loss among turkey producers. Outbreaks have been reported in different areas in the USA, Canada, Great Britain and recently, South America, particularly in Brazil (1, 5, 4, 6, 15).

Prior to more extensive sequence analysis, TCoV had been assigned as a member of group 2 of the Coronavirus genus, but it has now been definitively classified as group 3 with other avian coronaviruses (2, 9, 12). In spite of several reports on TCoV genetic characterization, the spike gene structure and variability remains unclear (2, 3, 8, 11, 13). As TCoV is one of the least characterized of all known coronaviruses, this lack of information is understandable. Most coronaviruses code for four major structural proteins: spike (S) glycoprotein, membrane (M) protein, small envelope (E) protein and nucleocapsid (N) protein, in addition to hemagglutinin esterase (HE) glycoprotein in some group II coronaviruses (12). The large S protein is responsible for the attachment of the virus to cell surfaces or endosomal membranes, thereby releasing the single-stranded positive sense RNA genome into the cytoplasm (12). It is known that the S gene from TCoV is the most variable gene in the entire genome as compared to other coronaviruses (8). The large S protein, with 180kDa, is structured as trimmers and subdivided in two subunits with 90kDa each. While subunit S1 forms the globular amino terminal portion of the spike, responsible for attachment of the virus to cells surface or endosomal membranes, thereby releasing the single-stranded, positive sense RNA

 All rights reserved 2007.

genome into the cytoplasm, the S2 subunit is the carboxy-terminal endodomain which plays a role on membrane fusion, virulence and pathogenesis (12). In addition, the only biological model to isolate and propagate TCoV in the laboratory is the commercial and/or specific-pathogen-free turkey and chicken embryo inoculation. However, few studies are described in the literature reporting genetic analyses performed on commercial and specific-pathogen-free turkeys, and none describe the interaction of TCoV with wild turkey species. In this study we report the isolation and propagation of a Brazilian strain of TCoV and the genetic variation in spike protein gene after serial passages in turkey embryonated eggs obtained from captive wild broad-breasted bronze breed, as well as the pathological findings related to virus propagation. As S2 is involved in membrane fusion and possibly in the degree of virulence of coronaviruses (8), the molecular analysis performed from passages 1 to 5 and 6 to 9 was carried out only with the S2 sequences in order to search for relation between pathologic findings and S2 polymorphisms.

Materials and Methods

Virus

Turkey coronavirus (TCoV/BR/2007) was obtained from a Brazilian turkey farm suffering from severe cases of acute enteritis described in 2007 (4, 15). This TCoV was successfully propagated in embryonated turkey eggs, supplied for a commercial hatchery, which produce USDA Beltsville White breed poults, localized in Brazil following all biosecurity measures. Viral purification, RNA isolation and subsequent RT-PCR amplification were performed according with our previous study conducted on a pool of intestinal tissue suspension, prepared from infected intestines harvested from inoculated embryos (4). The virus titration was performed at 10-fold dilutions into five groups of five 28-day-old embryonated turkey eggs. The 50% embryos infectious dose (EID_{50}) was calculated by method described before (14) by analyzing respective macroscopic lesions in the intestinal tract (7). Intestinal tissues, corresponding to 2.0×10^4 EID_{50} titre, were homogenized in 2-fold volume of minimal essential medium (GIBCO-BRL, Invitrogen, Carlsbad, CA), clarified by centrifugation at 2, 500*g* for 20 min and finally filtered twice through 0.45- and 0.22µm membrane filters (Millipore, Bedford, MA). The presence of TCoV in the filtrate was confirmed using RT-PCR of a portion of 3´UTR region (13). Extensive testing of the inoculums was done to exclude the possibility of the presence of any pathogens other than TCoV.

Turkey embryos

The birds were raised in the Veterinary School with Newcastle vaccination schedule, in a captive breed, with restricted contact with others birds, and checked each month for the most important pathogens described as turkey astrovirus type 1 and 2 (TAstV-1; 2), turkey reovirus, turkey rotavirus by molecular approaches (6). The embryos were collected 7 days after position and kept in a sterile hatchery. By our experience, the wild broad-breasted bronze breed has as main biological characteristic the respective period of hatch of 33 days.

Experimental design

The 25-day-old embryonating turkey eggs were inoculated with 0.3 ml of $10^{2.4}$ EID_{50} of TCoV via amniotic sac following procedures described previously (7). A control group of twenty 25-day-old turkey embryos were inoculated with sterile phosphate buffered solution (PBS). Three days after infection, embryos were submitted to an external exam and samples of liver, spleen, kidneys, cloacal bursa thymus, ileum, ileum-caecal junction and caeca were collected stored at -86ºC and fixed in 10% neutral buffered formalin, embedded in paraffin blocks. The passages were named P1 to P9, and the sequences were submitted to databank gene and sequences accession numbers are TCoV-1/BR/2008; TCoV-2/BR/2008 and TCoV-3/BR/2008.

Pathology analysis

Paraffin-embedded tissues were sectioned at 4-µm, mounted, stained with haematoxylin and eosin, and examined for microscopic alterations. The lesions were classified and scored for severity of inflammatory reactions as follows: -, no lesion; +/-, minimal; +, mild; ++, moderate and +++, severe. The distribution of lesions was scored as focal, multifocal and diffuse. The unstained sectioned tissues were submitted to immunofluorescent antibody assay (IFA) using the purified IgG conjugated to biotin described previously for documenting virus involvement in the lesions (4). The optimal biotin-labeled antibody dilution used was 1:100 (100µl per slide) in PBS plus 5% of bovine serum albumin incubated overnight at 4ºC inside a dark humidified chamber. First unstained sections were submitted to deparaffinization, rehydration and washes in PBS containing 0.1% of Triton S-100 (Sigma-Aldrich®, St Louis, MO). The washes steps were the same and 1:100 dilution of streptavidin-FITC (Sigma-Aldrich®) was added covering all the sections. The slides were incubated at room temperature and were kept in the dark for 30 min. The slides were mounted with Fluoromount® (Sigma-Aldrich®) medium added by 0.1% of DAPI (4´, 6´- diamino-2-phenylindole dihydrochoride) and submitted to UV observation. The images were processed under an Axio Imager A.1 light microscope connected to AxioCam MRc (Carl Zeiss Oberkochen, Germany), and micrographs were processed with Axiovision 4.7 software (Carl Zeiss).

Extraction of RNA and reverse transcription polymerase chain reaction (RT-PCR)

The pool of tissue fragment corresponded to ileum, ileum-cecal junction and caeca corresponded to passages from one to five and six to nine were pooled and the sequences were submitted to databank gene with accession numbers TCoV-1/BR/2008 (original inoculum); TCoV-2/BR/2008 (passage one to five) and TCoV-3/BR/2008 (passage six to nine). Viral RNA was extracted using the Pure Link® viral RNA/DNA extraction KIT (Invitrogen, Carlsbad, USA) following the manufacturer's instructions. Reverse-transcription and polymerase chain reaction (RT-PCR) for the partial S2 subunits coding-regions (S2+ 5' TAAATTGTTAGAGACTCGTGATAT 3' and S2- 5'TGCGGAAGCTATTAATACAGGT 3', positions 1178 to 2073 of S gene regarding the reference sequence from strain of TCoV-GI were performed as described previously (8-11). PCR products were analysed by 1.5% agarose gel electrophoresis and visualized by staining with ethidium bromide and UV illumination.

Nucleotide sequencing and sequence analysis

The amplified products from each passage (5 repetitions) were purified using a commercial kit (Concert, Gibco-BRL**,** Miami, USA) and sequenced with both forward and reverse primers using BigDye™ Terminator Kit (Applied Biosystems, Warrington, UK) with an automated sequencer (ABI, model 377, Applied Biosystems) according to the manufacturer's instructions.

Sequences were assembled using SeqMan Pro. and genome annotation was conducted with SeqBuilder (DNASTAR, Inc., v.8.0.2, Madison, WI). Nucleotide and deduced amino acids sequences were aligned using Clustal/ W in the MegAlign program (DNASTAR, Inc.). Phylogenetic tree was constructed based on amino acid alignments using the BLASTN analyses (http://www.blast.ncib.nlm.nih.gov/Blast.cgi).

GenBank accession numbers

Sequences generated in this study for TCoV were submitted to GenBank and assigned the following accession numbers: TCoV-1/BR/2008 (FJ957898); TCoV-2/BR/2008 (FJ9557899) and TCoV-3/BR/2008 (FJ957900). Accession numbers for reference sequences used in this study are TCoV-540 (EU022525); TCoV-ATCC (EU022526); TCoV-Gh (AY342356); TCoV-GI (AY342357); TCoV (Canadian isolate, NC_004718).

Results

Histopathology analysis

No lesions were detected in intestine sections and in any other tissue or organ of uninfected controls (Fig. 1A). The microscopic achieves in each group of infected embryos were characterized as mild enteritis predominantly observed at the ileum-caecum junction. After five consecutive embryo passages (Fig. 1B), it was possible to detect a discreet disruption of villous enterocytes and congestion. Regarding to the last four passages, a restoring of intestinal epithelium was observed (Fig. 1C). The other tissues, liver, spleen, kidneys, cloacal bursa thymus, submitted to histopathology analysis did not revealed microscopic alterations.

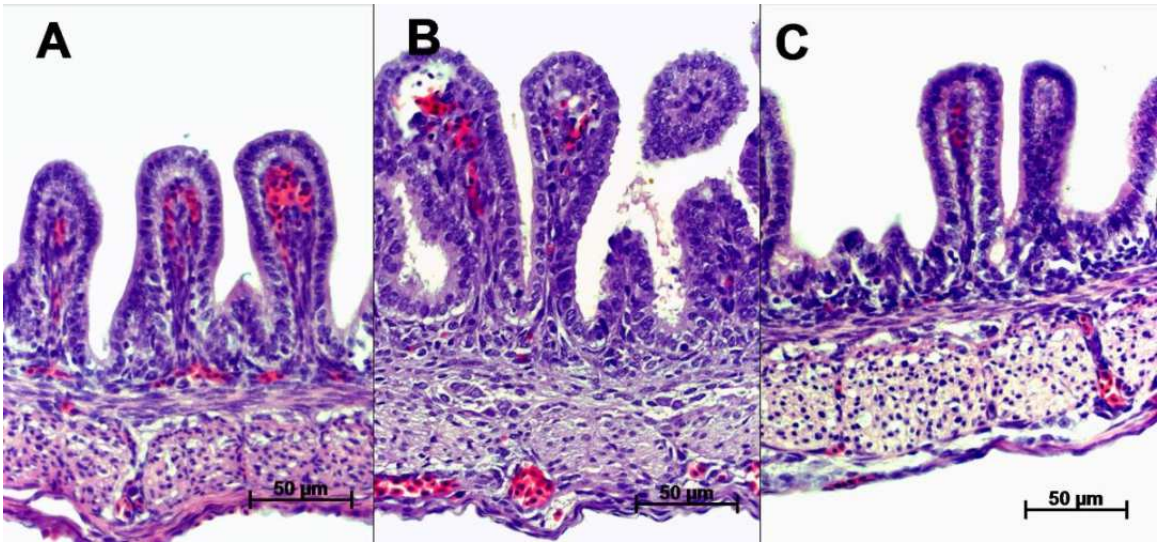

Figure 1. Haematoxylin- and eosin-stained sections of the ileum-caecum junction from embryos inoculated with TCoV-1/BR/2008 from first to tenth passages (A-C). The first three passages demonstrated no significant microscopic alteration with integrity of intestinal epithelium (A). Intestinal sections showing mild microscopic lesions characterized as enterocytes disruption after five consecutive embryo passages (B); restoration of villous integrity from sixty to ninth passages (C).

S2 sequence analysis

After sequence of each individual amplified segment of S2, obtained from P1 to P9, no genetic difference could be found between P1 and P5, and P6 to P9, respectively (data not shown). So, the sequences were documented and comparatively analyzed as two separate events. A phylogenetic analysis was undertaken with the three samples generated in this study original TCoV-1/BR/2008, and subsequent passages TCoV-2/BR/2008 and TCoV-3/BR/2008. The phylogenetic tree in Fig. 2 shows that sequences from the original TCoV-1/BR/2008 isolate and passages TCoV-2/BR/2008 and TCoV-3/BR/2008 grouped in a same cluster with a bootstrap value of 100, together with sequence related to strain TCoV-Gl from the USA.

In addition, partial S2 sequences from the original strain and embryos passages had nucleotide identities of 99.9, 98.2 and 98%, respectively (Table 1) with strain TCoV-GI, while, for strain TCoV-Gh from the USA, close to these in the phylogenetic tree, the nucleotide identities were 97.8, 96.6 and 96.2%, respectively (Table 1).

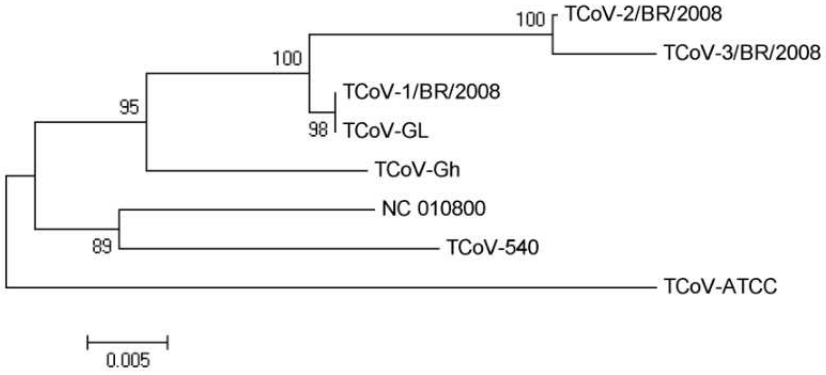

Figure 2. Evolutionary tree of coronaviruses based on a spike 1 gene sequence of isolated turkey coronavirus (TCoV-1/BR/2008) and serial passages in turkey embryos (TCoV-2/BR/2008 and TCoV-3/BR/2008). Evolutionary distances were computed by using the Tamura-Nei method and are in the units of number of base substitutions per site. Previously published coronavirus sequences from different sources were included for comparative purposes. The percentage of replicate trees in which the associated taxa clustered together in the bootstrap test (1,000 replicates) is shown next to the branches. The tree is drawn to scale; branch lengths are in the same units as those of the evolutionary distances used to infer the phylogenetic tree. Phylogenetic analyses were conducted in Lasergene DNA STAR. TCoV, *turkey coronavirus*. Scale bar indicates nucleotide substitutions per site.

Table 1. Percentage nucleotide identities between part of the S2 protein gene of five coronaviruses from turkeys

	TCoV-Gh	**TCoV-GI**	**TCoV (Canadian isolate)**	**TCoV-ATCC**	**TCoV-540**	**TCoV-1/BR/2008**	**TCoV-2/BR/2008**	**TCoV-3/BR/2008**
TCoV-Gh		97.8	96.4	94.4	96.2	97.8	96.6	96.2
TCoV-GI			96.6	94.7	96.2	99.9	98.2	98.0
TCoV (Canadian isolate)				94.3	96.9	96.6	95.4	94.8
TCoV-ATCC					94.2	94.7	93.5	92.9
TCoV-540						96.2	94.9	94.5
TCoV-1/BR/2008							98.6	98.0
TCoV-2/BR/2008								99.4
TCoV-3/BR/2008								

 All rights reserved 2007.

Discussion

Despite of the great economic importance of Brazilian turkey industry, TCoV has only been officially described in South of America in 2006 (15). In addition, since its initial recognition in the early 1970s, the relationship of TCoV to other coronaviruses is still under debate. It was speculated that discrepant results regarding the relationship between TCoV and other coronaviruses might be caused by different isolates of TCoV from various geographical areas at different times (8). In a recent study, diverse coronaviruses-like were found by PCR in wildfowl and wading birds in England, where some of them were related to infectious bronchitis virus (IBV). Moreover in an interesting study, it has been suggested that emergence of a group 3 coronavirus occurred through recombination (9-11).

Regarding IBV, it has been demonstrated that virus replication in chickens and embryonated eggs is facilitated by a serine or alanine residue, respectively, at amino acid position 95 (11). However, in this particular study, no significant correlation could be found between genetic variation and pathologic findings. By analyzing the sequences at position 21,825 of the TCoV genome, an amino acid change (val→leu) was observed in both TCoV-2/BR/2008 and TCoV-3/BR/2008. This suggests that TCoV growth in wild turkey embryos does not enhance a nucleotide substitution in any specific position. On the other hand, further studies on TCoV passages in embryos and adult commercial turkeys are necessary to clarify virus-host interaction. Moreover, TCoV virus particles may be a poor indication of infection because of relatively short-lived virus shedding by infected birds (12). In addition, the major obstacle to conducting studies on TCoV is the impossibility of growth of this virus in a cell culture system. The only trustworthy biological model to propagate and isolate TCoV is the turkey embryos. This virus replicates only in embryos tissues, within epithelium of intestines and cloacal bursa thus amniotic inoculation is required for isolation and propagation of this virus (7).

In spite of a similar primary genomic structure to the S gene, gene 3, M gene, gene 5 and N gene from 5` to 3` between TCoV and IBV, differences were mainly reported in the S protein gene (2, 3, 8-11). To our knowledge, this is the first result of TCoV pathology and genetic variability due to serial passages in wild turkey embryos, considered a natural host. As shown herein, after five consecutive passages, the histological lesions were classified as characteristic of TCoV infection as reported previously, in spite of being less severe when compared to commercial and specific-pathogen-free infections (7).

The phylogenetic tree based on the spike protein region was the same as that based on TCoV isolate strains grouped in the same cluster as the USA isolate (GenBank accession number AY342357). It has been demonstrated that UK isolates and US isolates of TCoV have the same origin and evolved independently in separate geographical areas, which resulted in genetic drift (8). However, this is the first S gene sequence of TCoV isolated in South America closely related to the US strain propagated in wild turkey species. However, it is still unknown how this virus is circulating from Central to South America. Recently, it has been shown that some wild bird populations of northern England presented viral RNA in faecal samples close related to coronavirus (8). Accumulation of S gene sequences of more TCoV isolates, especially from migratory wild birds, as well as more TCoV host interactions will further clarify the pathogenesis and evolution of TCoV throughout the American continent. Finally, embryonated eggs also provide a potential host system for studies related to virus-host interactions.

Acknowledgements

This work was supported by FAPESP - Fundação de Amparo à Pesquisa do Estado de São Paulo and CNPq - Conselho Nacional de Desenvolvimento Científico e Tecnológico. We are indebted to the technical team from SADIA-Unidade Uberlândia, MG Brazil. Tereza C. Cardoso and Paulo E. Brandão are recipient of fellowships from CNPq.

References

1. ADAMS, NR., HOFSTAD, NS. Isolation of transmissible enteritis agent of turkeys in avian embryos, Avian Dis., 1971, 15, 426-433.

2. BRERSLIN, LG., SMITH, F., FULLER, J., GUY, JS. Sequences analysis of the turkey coronavirus nucleocapsid protein and 3`untranslated region identifies the virus as a close relative of infection bronchitis virus. Virus Res., 1999, 65,187-193.

3. CAO, J., WU, CC., LIN, TL. Complete nucleotide sequence of polyprotein gene 1 and genome organization of turkey coronavirus. Virus Res., 2008, 13, 643-49.

4. CARDOSO, T.C., CASTANHEIRA, T.L., TEIXEIRA, M.C.B, ROSA, A.C., HIRATA, K.Y., ASTOLPHI, R.D., LUVIZOTTO, M.C. Validation of an immunohistochemistry assay to detect turkey coronavirus: a rapid and simple screening tool for limited resource settings. Poult Sci., 2008, 87, 1347-1352.

5. CAVANAGH, D. Coronaviruses in poultry and other birds. Avian Pathol., 2005, 34, 439-448.

6. CULVER, F., DZIVA, F., CAVANAGH, D., STEVENS, MP. Poult enteritis and mortality syndrome in turkeys in Great Britain. Vet. Rec., 2006, 159,209-210,

7. GUY, JS. Isolation and propagation of coronaviruses in embryonated eggs. Meth. Mol. Biol., 2008, 454,109-117.

 All rights reserved 2007.

8. JACKWOOD, MW., BOYNTON, TO., HILT, DA., MCKINLEY, ET., KISSINGER, JC., PATERSON, AH., ROBERTSON, J., LEMKE, C., MCCALL, AW., WILLIAMS, SM., JACKWOOD, JW., BYRD, LA. Emergence of a group 3 coronavirus through recombination. Virology, 2010, 398, 98-108.

9. LIN, TL., LOA, CC., WU, CC. Existence of gene 5 indicates close genomic relationship of turkey coronavirus to infectious bronchitis virus. Acta Virol., 2002, 46, 107-116.

10. LIN, TL., LOA, CC., WU, C C. Complete sequences of 3`end coding region for structural protein genes of turkey coronavirus. Virus Res., 2004, 106, 61-70.

11. LOA, CC., WU, CC., LIN, TL. Comparison of 3`-end encoding regions of turkey coronavirus isolates from Indiana, North Carolina, and Minnesota with chicken infectious bronchitis coronavirus strains. Intervirology, 2006, 49, 230-238.

12. MASTERS, P. The molecular biology of coronavirus. Adv. Virus Res., 2006, 66, 193-292

13. PANTIN-JACKWOOD, MJ., DAY, JM., JACKWOOD, MW., SPACKMAN, E. Enteric viruses detected by molecular methods in commercial chicken and turkey flocks in the United States between 2005 and 2006. Avian Dis., 2008, 52, 235-244.

14. REED , LJ., MUENCH, H. A simple method for estimating fifty percent endpoints. Am. J. Hyg., 1938, 27, 493-497.

15. TEIXEIRA, MC., LUVIZOTTO MC., FERRARI HF., MENDES AR., DA SILVA SE., CARDOSO TC. Detection of turkey coronavirus in commercial turkey poults in Brazil. Avian Pathol., 2007, 36, 29-33